Approx. Weight
1465 Kg

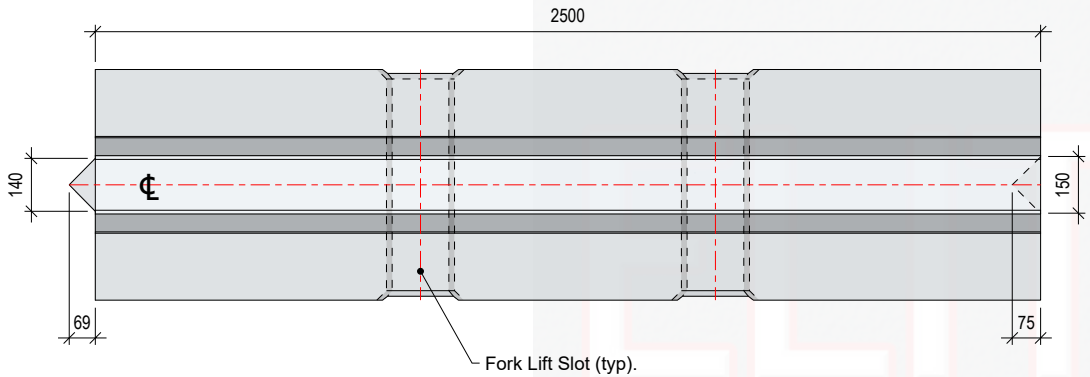

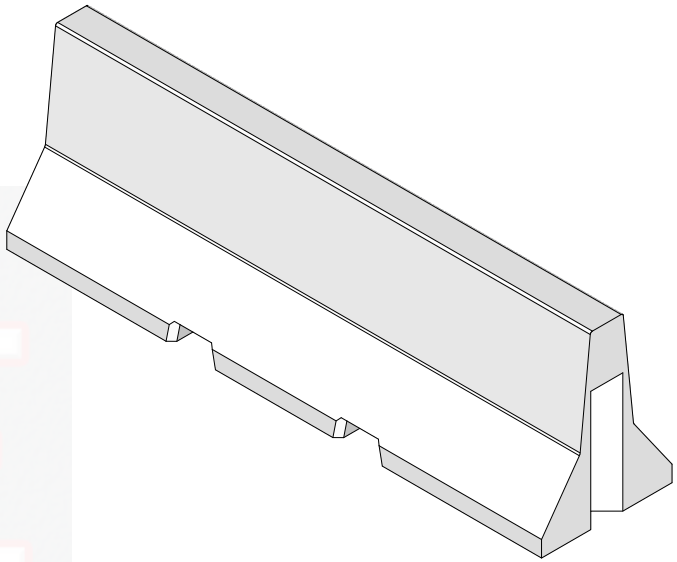

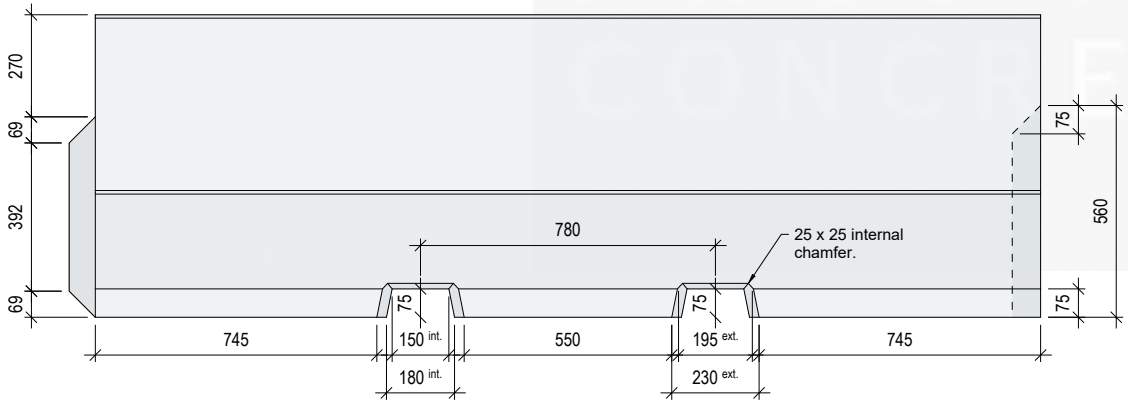

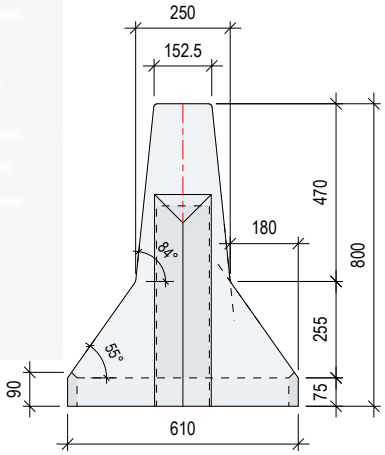

REV	DATE	REASON FOR ISSUE	DRN	APP
O	08-09-25	First Issue.	CTC	-

TITLE

Unisex Jersey Interlocking Road Barrier
c/w Fork Slots
Elite Product Code : **JerseyMF**

ELITE PRECAST CONCRETE LTD
UNIT O, HALESFIELD 9
TELFORD TF7 4QW
Tel : 01952 588885
www.eliteprecast.co.uk
email : sales@eliteprecast.co.uk

DRN	CHKD	DATE	SIZE	SCALE	DRG	REV
CTC	-	08-09-25	A4	1:20	EPC-JERSEYMF	O

EPC-JERSEYMF - Unisex Jersey Road Barrier cw Fork Slots x 2500 x 800 x 610