PROJECTION

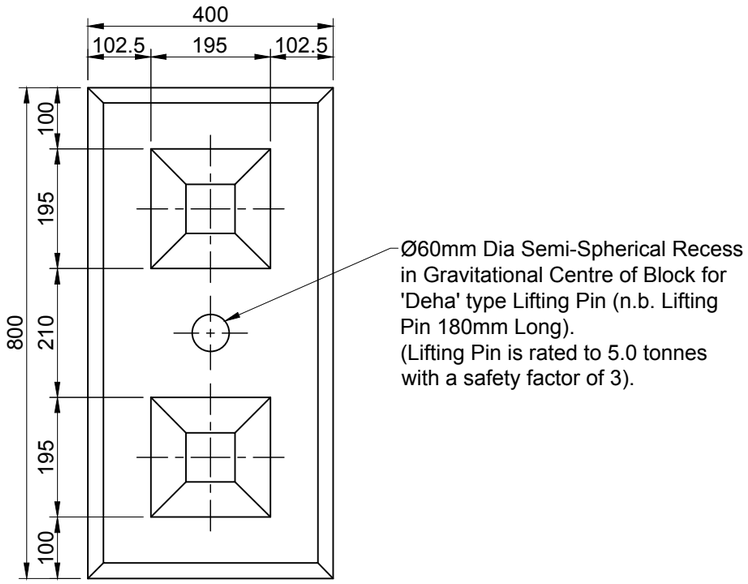


Plan

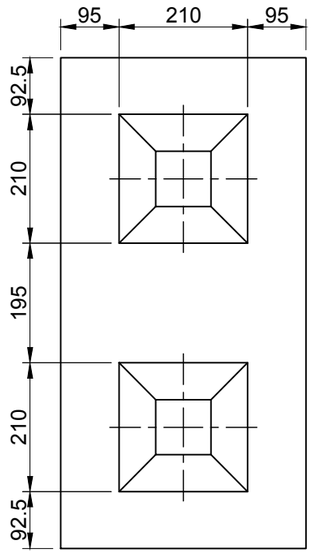


Section on Arrow A - A

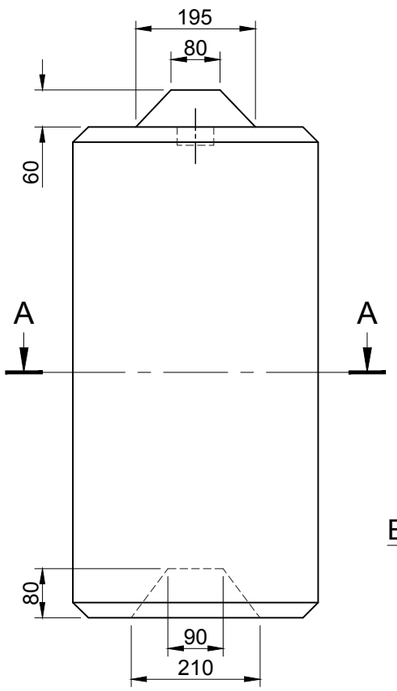


Elevation

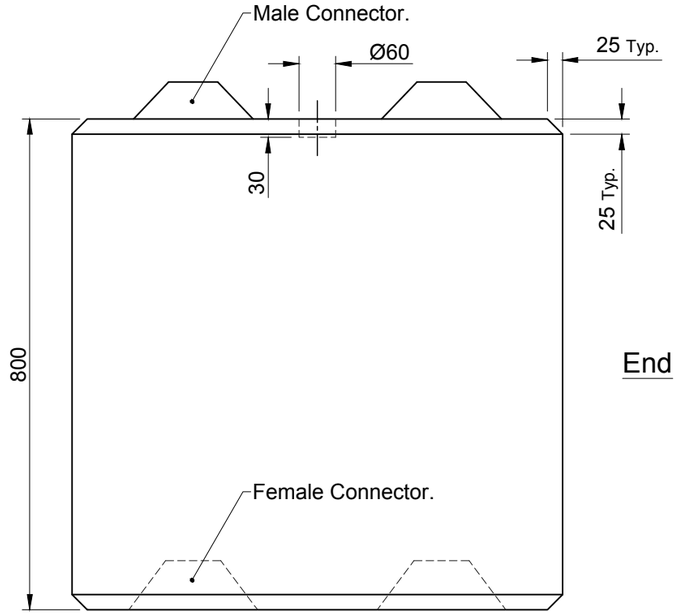


End

Total Block Weight : 600Kg

Note :
Some details omitted for clarity.

| REV | DATE | REASON FOR ISSUE | DRN | APP | REV | DATE | REASON FOR ISSUE | DRN | APP |
|---|---|---|---|---|---|---|---|---|---|
| | | | | | O | 12.11.13 | For Information | CTC | RD |

TITLE :
Legato™ Interlocking Block
400 x 800 x 800mm (M / F Connectors)
Elite Product Code : LG-400

ELITE PRECAST CONCRETE LIMITED
HALESFIELD 9, TELFORD
SHROPSHIRE TF7 4QW

| DRN : | CHKD : | DATE : | DRG SIZE : | SCALE: | DRG | REV |
|---|---|---|---|---|---|---|
| CTC | RD | 12-11-13 | A3 | 1:10 | 141 | O |